Operating Instructions

Series RS7000 Hose Reels

Low, Medium and High Pressure Model Numbers:

RS7600 OLP	RS7900 OLP	RS7850 OMP
RS7650 OLP	RS7925 OLP	RS7400 OHP
RS7670 OLP	RS7600 OMP	RS7450 OHP
RS7800 OLP	RS7650 OMP	RS7600 OHP
RS7850 OLP	RS7800 OMP	RS7650 OHP

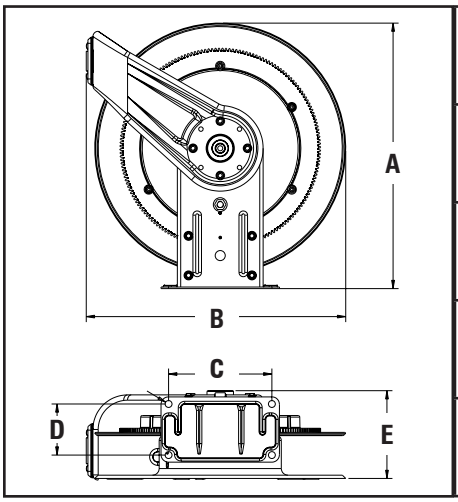

A	20 1/4”
B	19 3/4”
C	7 13/16”
D	3 7/8”
E	7 3/8”

REELSAFE®

IMPORTANT

Read this manual carefully before installing, operating or servicing equipment.

SAFETY

Personal injury and/or equipment damage may result if proper safety precautions are not observed.

- Ensure that reel is properly installed before connecting input and output hoses.
- Bleed fluid/gas pressure from system before servicing reel.
- Before connecting reel to supply line, ensure that pressure does not exceed maximum working pressure rating of reel.
- Remember, even low pressure is very dangerous and can cause personal injury or death.
- Be aware of machinery and personnel in work area.
- If a leak occurs in the hose or reel, remove system pressure immediately.
- A high tension spring assembly is contained within the reel. Exercise extreme caution.
- Pull hose from reel by grasping the hose itself.
- Ensure that reel, hose, and equipment being serviced are properly grounded. Use an ohmmeter to check ground continuity.
- If reel ceases to unwind or rewind, remove system pressure immediately. Do not pull or jerk on hose!
- Treat and respect the hose reel as any other piece of machinery, observing all common safety practices.

ADJUSTMENTS

Warning: Use extreme caution; reel under tension. Avoid releasing latch mechanism. If necessary, adjust spring tension on reel by adding or removing wraps of hose from spool, one wrap at a time, until desired tension is obtained. Add wraps to increase tension. Remove wraps to decrease tension.

SERVICE INSTRUCTIONS

User servicing of the reel is limited to replacing input/output hoses only. Refer all other repairs to an authorized service person or directly to Reelcraft. Failure to do so can result in personal injury and/or equipment damage and may void the warranty. **Warning:** Rewind hose on reel, then bleed pressure from system before performing the following procedures.

1. Replace hoses in accordance with procedures given in “Installation Instructions” section of this manual.

Caution: When replacing drive spring, hold the center of the spring down as the hub is pulled out. If the center is allowed to raise up, the spring may escape from it’s container with enough force to cause injuries.

2. All mating moving parts are to be lubricated with Perma Bond or Loctite anti-seize compound.

When disposing of old or broken spring assemblies, the coils should be welded or wired together to prevent possible injury to scrap handling personnel.

Form# 1311-1119 Rev: 6/2024

Reelcraft Industries, Inc. • 2842 E Business Hwy 30, Columbia City, IN 46725
Ph: 800-444-3134 / 260-248-8188 • Fax: 800-444-4587 / 260-248-2605
Customer Service: 855-634-9109 • reelcraft@reelcraft.com • www.reelcraft.com

REELCRAFT®

INSTALLATION INSTRUCTIONS

MOUNTING

Caution: Unless reel was specified differently when ordering, maximum installation height is 16 feet. Do not exceed this distance.

1. Unpack and inspect reel for damage. Turn by hand to check for smooth operation. Check for completeness.
2. Configure reel for top, side or bottom-wind hose dispensing by removing nuts (1) securing guide arm bracket (2). Position guide arm bracket to desired location, and replace nuts. **Caution:** When changing guide arm positions, the U-bolt must be placed in the proper location as instructed in figure A below. The reel can "latch out" during use if this instruction is not adhered to.
3. Position reel on floor, wall, or ceiling. Secure into place using four (customer supplied) bolts (3).

INSTALLING THE INPUT HOSE

Warning: Ensure that supply line pressure does not exceed maximum working pressure rating of reel. Apply pipe thread sealant to all threads. **Caution:** Use flexible hose connection at input. Do not use rigid plumbing.

1. Connect supply line hose (4) to main shaft input (5) as indicated in illustration.

INSTALLING THE OUTPUT HOSE (No Hose Model)

Warning: Use extreme caution; reel under tension. Avoid releasing latch mechanism. Apply pipe thread sealant to all threads.

1. Manually turn sheave (10) until spring is tight, back off 3 turns, then latch.
2. Route output hose (11) through guide arm bracket (2), U-bolts (12), then through cutout (13) in spool as indicated in illustration.
3. Connect output hose (11) to swivel (14) as indicated in illustration.
4. Tighten U-bolts (12).
5. Charge inlet and outlet hoses. Momentarily open control valve on working end to purge hoses of gases. When fluid appears at control valve, close valve. With hoses fully charged, release latch and wind output hose onto reel.
6. Install REELSAFE® hose identification sticker onto working end of hose in a highly visible location. (Figure B)

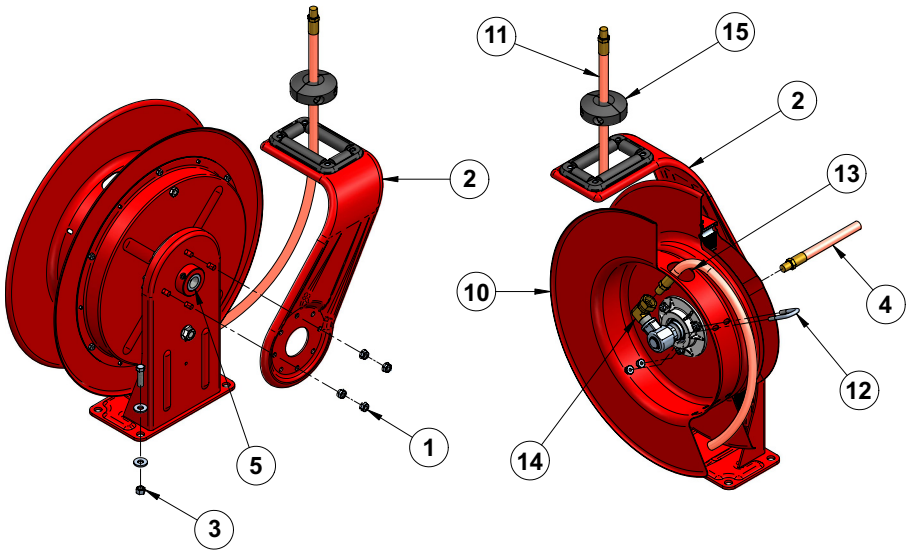

Figure A

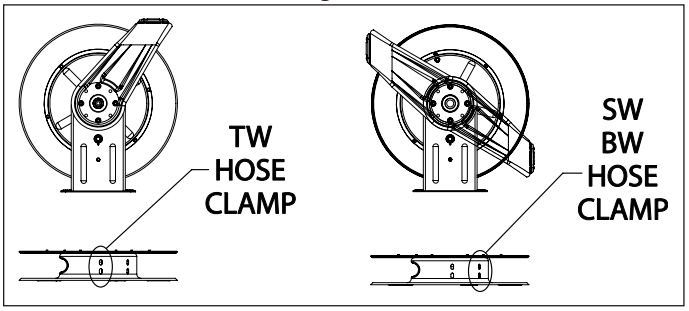

Figure B

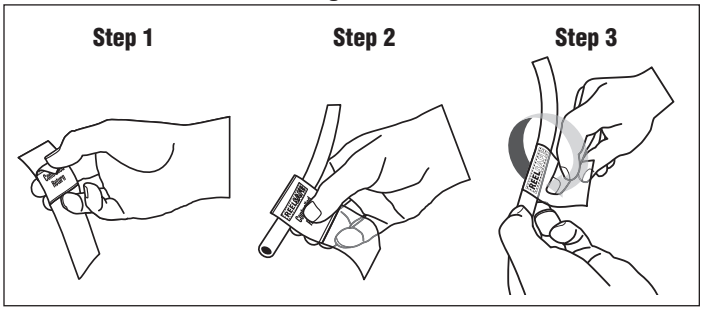

SERVICE TO CLUTCH MECHANISM

1. To access the clutch, remove set screw (13) indicated in below figure.
2. Remove spool assembly from reel base (2).
3. Remove shaft (24) and pinion gear (25) (Note: floats freely and removes without tools).
4. Remove clutch housing (22) by removing 4 bolts (19) to access clutch.
5. Inspect the clutch mechanism for excess wear or damage. If required, remove and replace (no special tools required)
6. Before replacing the clutch inspect bearing (20) replace if there is excess wear.
7. Replace clutch assembly (21) in housing (22). Ensure exposed shoes are facing the base side.
8. Reinstall housing (22) with bolts (19) and nuts (23).
9. Align key way in clutch assembly (20) with key way in shaft (24) and install shaft through bearing (20) in base. Orient shaft so longer key way faces base side.
10. Inspect gear (25). If in good condition, reinstall gear onto shaft (24).
11. Reinstall spool assembly and test reel for clutch functionality.

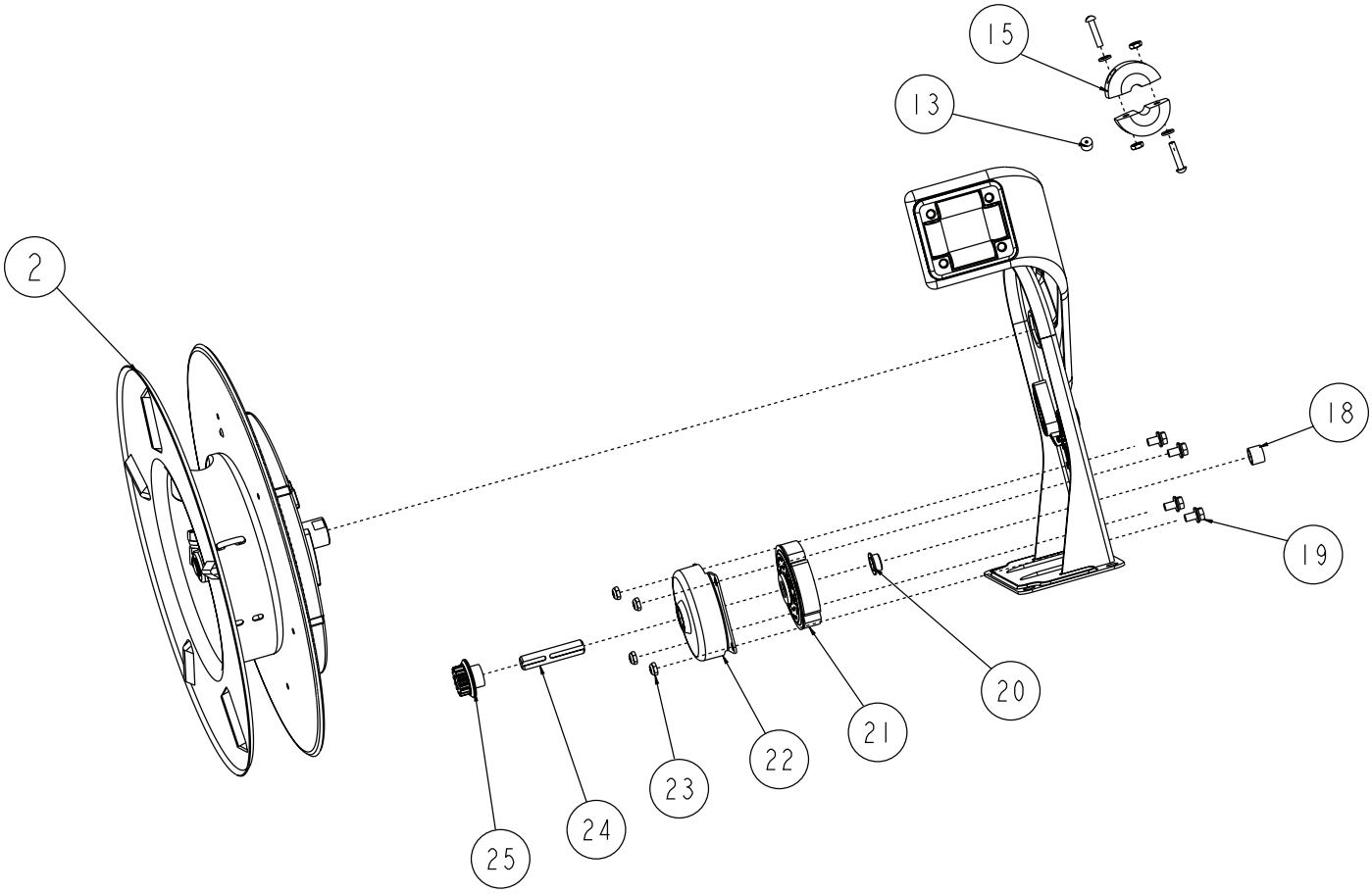

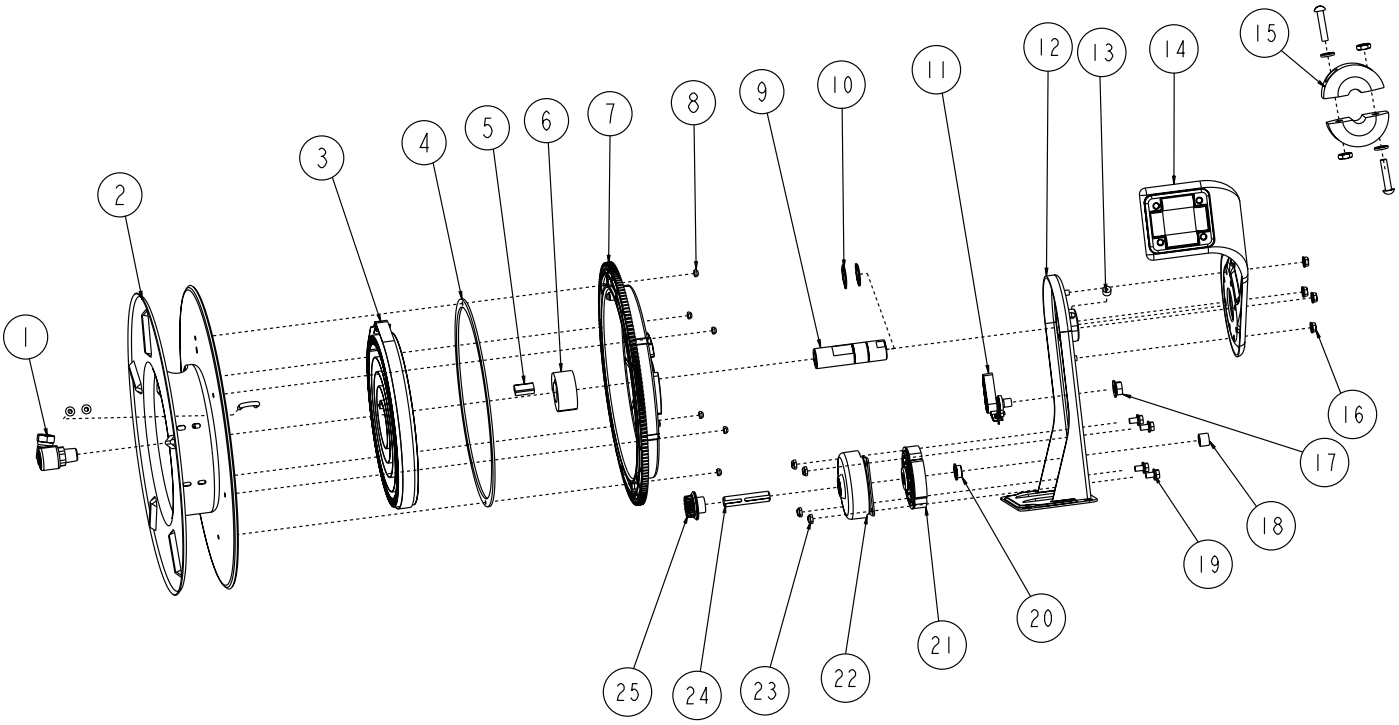

Item #	Description	# Req.	RS7600 OLP	RS7650 OLP	RS7670 OLP	RS7800 OLP	RS7850 OLP
1	Swivel & Ell Assembly	1	S600923-1	S600923-1	S600923-1	S600923-1	S600923-1
2	Spoool & Hub Assembly	1	602726	602726	602726	602726	602726
3	Drive Spring Assembly	1	260028-1	260028-1	260028	S260037	S260037
4	Gasket	1	S260069	S260069	S260069	S260069	S260069
5	Arbor Key	1	2612775	2612775	2612775	2612775	2612775
6	Spring Arbor	1	261274	261274	261274	261274	261274
7	Spring Cover	1	263183	263183	263183	263183	263183
8	10-32 X 3/8" Nyloc Nut	6	S82-15	S82-15	S82-15	S82-15	S82-15
9	Main Shaft	1	602231	602231	602231	602231	602231
10	1 1/4" Snap Ring	2	300007	300007	300007	300007	300007
11	Latch Pawl Assembly	1	S602694	S602694	S602694	S602694	S602694
12	Base Assembly	1	602842	602842	602842	602842	602842
13	1/2-13Set Screw	1	SS35-84	SS35-84	SS35-84	SS35-84	SS35-84
14	Guide Arm with Rollers	1	S600017	S600017	S600017	S600017	S600017
15	Bumper Stop Assembly	1	None	1-HR1004-3	1-HR1004-3	None	2-HR1004-3
16	5/16-18 Lock Nut	4	300107	300107	300107	300107	300107
17	1/2-20 X 5/8" Hex Nut	1	S280-8	S280-8	S280-8	S280-8	S280-8
18	.625 Vinyl Cap	1	263205	263205	263205	263205	263205
19	5/16-18 Nyloc Nut	4	S44-10	S44-10	S44-10	S44-10	S44-10
20	Bearing Bushing	1	263199	263199	263199	263199	263199
21	Clutch	1	263198	263198	263198	263198	263198
22	Clutch Housing	1	263402-R	263402-R	263402-R	263402-R	263402-R
23	5/16-10 X 1/2 Screw	4	S85-7	S85-7	S85-7	S85-7	S85-7
24	Keyed Shaft	1	263188	263188	263188	263188	263188
25	Pinion Gear	1	263182	263182	263182	263182	263182
Hose Assembly			None	601017-50	601017-70	None	601021-50
Hose Identification Sticker			S263210	S263210	S263210	S263210	S263210
Hose I.D. X Length			None	3/8" X 50'	3/8" X 70'	None	1/2" X 50'
Reel Inlet Connection			1/2" NPT(F)	1/2" NPT(F)	1/2" NPT(F)	1/2" NPT(F)	1/2" NPT(F)
Max. Operating Pressure			500 PSI	300 PSI	300 PSI	500 PSI	300 PSI
Max. Operating Temperature			210 °F	150 °F	150 °F	210 °F	150 °F

Item #	Description	# Req.	RS7900 OLP	RS7925 OLP	RS7600 OMP	RS7650 OMP	RS7800 OMP
1	Swivel & Ell Assembly	1	600242	600242	S600300	S600300	S600300
2	Spoool & Hub Assembly	1	602726	602726	602726	602726	602726
3	Drive Spring Assembly	1	SS6000263	SS6000263	S260053	S260053	S260053
4	Gasket	1	S260069	S260069	S260069	S260069	S260069
5	Arbor Key	1	261275	261275	261275	261275	261275
6	Spring Arbor	1	261274	261274	261274	261274	261274
7	Spring Cover	1	263183	263183	263183	263183	263183
8	10-32 X 3/8" Nyloc Nut	6	S82-15	S82-15	S82-15	S82-15	S82-15
9	Main Shaft	1	602231-1	602231-1	602231	602231	602231
10	1 1/4" Snap Ring	2	300007	300007	300007	300007	300007
11	Latch Pawl Assembly	1	S602694	S602694	S602694	S602694	S602694
12	Base Assembly	1	602842	602842	602842	602842	602842
13	1/2-13Set Screw	1	S35-84	S35-84	S35-84	S35-84	S35-84
14	Guide Arm with Rollers	1	S600017	S600017	S600017	S600017	S600017
15	Bumper Stop Assembly	1	None	3-HR1004-3	None	1-HR1004-3	None
16	5/16-18 Lock Nut	4	300107	300107	300107	300107	300107
17	1/2-20 X 5/8" Hex Nut	1	S280-8	S280-8	S280-8	S280-8	S280-8
18	.625 Vinyl Cap	1	263205	263205	263205	263205	263205
19	5/16-18 Nyloc Nut	4	S44-10	S44-10	S44-10	S44-10	S44-10
20	Bearing Bushing	1	263199	263199	263199	263199	263199
21	Clutch	1	263198	263198	263198	263198	263198
22	Clutch Housing	1	263402-R	263402-R	263402-R	263402-R	263402-R
23	5/16-10 X 1/2 Screw	4	S85-7	S85-7	S85-7	S85-7	S85-7
24	Keyed Shaft	1	263188	263188	263188	263188	263188
25	Pinion Gear	1	263182	263182	263182	263182	263182
Hose Assembly			None	601026-25	None	5-260043	None
Hose Identification Sticker			SS263210	SS263210	SS263210	SS263210	SS263210
Hose I.D. X Length			None	3/4" X 25'	None	3/8" X 50'	None
Reel Inlet Connection			3/4" NPT(F)	3/4" NPT(F)	1/2" NPT(F)	1/2" NPT(F)	1/2" NPT(F)
Max. Operating Pressure			500 PSI	250 PSI	3000 PSI	2600 PSI	3250 PSI
Max. Operating Temperature			210 °F	150 °F	210 °F	210 °F	210 °F

Item #	Description	# Req.	RS7850 OMP	RS7400 OHP	RS7450 OHP	RS7600 OHP	RS7650 OHP
1	Swivel & Ell Assembly	1	S600300	S602110	S602110	S602110	S602110
2	Spoool & Hub Assembly	1	602726	602728	602728	602726	602726
3	Drive Spring Assembly	1	S260053	S260053	S260053	S260053	S260053
4	Gasket	1	S260069	S260069	S260069	S260069	S260069
5	Arbor Key	1	261275	261275	261275	261275	261275
6	Spring Arbor	1	261274	261274	261274	261274	261274
7	Spring Cover	1	263183	263183	263183	263183	263183
8	10-32 X 3/8" Nyloc Nut	6	S82-15	S82-15	S82-15	S82-15	S82-15
9	Main Shaft	1	602231	602231	602231	602231	602231
10	1 1/4" Snap Ring	2	300007	300007	300007	300007	300007
11	Latch Pawl Assembly	1	S602694	S602694	S602694	S602694	S602694
12	Base Assembly	1	602842	602842	602842	602842	602842
13	1/2-13Set Screw	1	S35-84	S35-84	S35-84	S35-84	S35-84
14	Guide Arm with Rollers	1	S600017	S600017	S600017	S600017	S600017
15	Bumper Stop Assembly	1	2-HR1004-3	None	1-HR1004-3	None	602762
16	5/16-18 Lock Nut	4	300107	300107	300107	300107	300107
17	1/2-20 X 5/8" Hex Nut	1	SS280-8	SS280-8	SS280-8	SS280-8	SS280-8
18	.625 Vinyl Cap	1	263205	263205	263205	263205	263205
19	5/16-18 X 1/2 Whiz LocK	4	S44-10	S44-10	S44-10	S44-10	S44-10
20	Bearing Bushing	1	263199	263199	263199	263199	263199
21	Clutch	1	263198	263198	263198	263198	263198
22	Clutch Housing	1	263402-R	263402-R	263402-R	263402-R	263402-R
23	5/16-10 X 1/2 Screw	4	S85-7	S85-7	S85-7	S85-7	S85-7
24	Keyed Shaft	1	263188	263188	263188	263188	263188
25	Pinion Gear	1	263182	263182	263182	263182	263182
Hose Assembly			8-260053	None	9-260044	None	5-260044
Hose Identification Sticker			S263210	S263210	S263210	S263210	S263210
Hose I.D. X Length			1/2" X 50'	None	1/4" X 50'	None	3/8" X 50'
Reel Inlet Connection			1/2" NPT(F)	1/4" NPT(F)	1/4" NPT(F)	1/4" NPT(F)	1/4" NPT(F)
Max. Operating Pressure			3250 PSI	5000 PSI	5000 PSI	5000 PSI	4800 PSI
Max. Operating Temperature			210 °F	210 °F	210 °F	210 °F	210 °F