73100

Pneumatic Tire Spreader

Instruction Manual

AME INTERNATIONAL
2347 Circuit Way, Brooksville, Florida USA 34604
Phone: (+1) 352.799.1111 • Toll Free: (+1) 877.755.4AME (4263) • Fax: (+1) 352.799.1112
E-mail: sales@ameintl.net • www.ameintl.net

CAUTION

- Before using the product, ensure that you carefully read and fully understand the instructions manual and all notes on the product. This is necessary to avoid injury to the operator and damage to the product.

- Use this product only for spreading tire and repairing the tire protective wrap. Do not use this product for any other purpose. Our company will not be responsible for the problems caused by any wrong operation.

- Keep the hook and claw of the machine clean during working. Clean excess matter such as grease in order to avoid injury to the operator caused by sliding.

- Do not use this product if it is visibly worn, distorted or damaged, handle with it according to the local rules and regulations on waste disposal.

In order to avoid injury to the eyes by the sundries during repairing process, always operate this product using appropriate eye protection.

PRODUCT ILLUMINATION

Vertical pneumatic tire spreader is specially designed for fixing and spreading the tires during repairs on cars and small trucks, microbus in order to work for the tire polishing, cleaning and films affixed etc, equipped with work light and tools rack to improve work efficiency, enabling the tire repair work to be more convenient. Manifest personalized design.

TECHNICAL PARAMETER

Be propitous to:
Tire width: 145MM-275MM 5.7" - 10.9"
Tire diameter: 11"-24", 5"-1"
Work voltage:
Input Voltage: 220V 50/60HZ
Work light voltage: 12V
Air pressure: 6-8 KG/CM^2 13lbs - 17lbs

PRODUCT CONFIGURATION

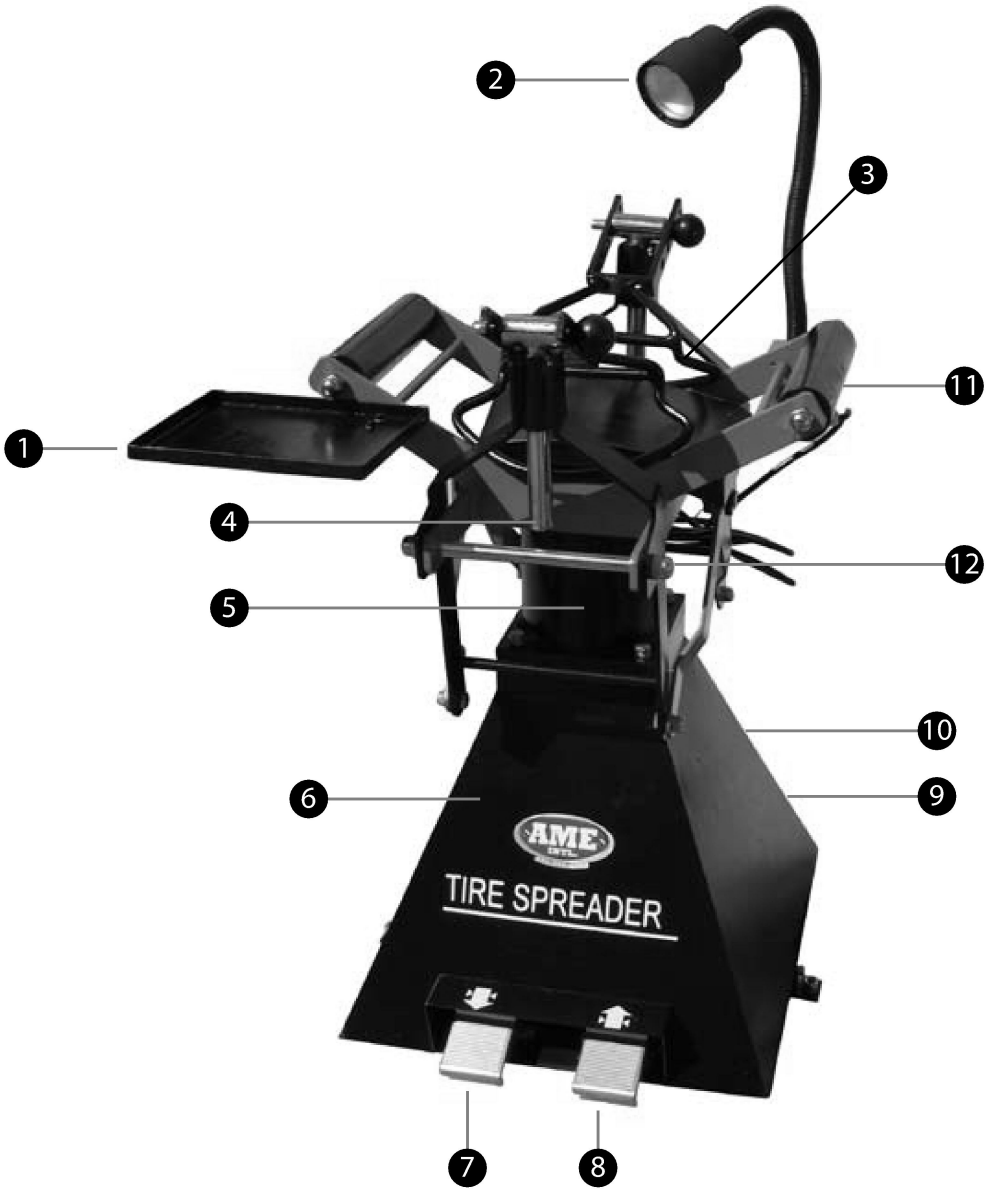

(1) Tools Tray
(2) Work Light
(3) Spreading Hook
(4) Orientation Pin
(5) Power
(6) Body
(7) Release Foot Valve
(8) Clamp Foot Valve
(9) Pneumatic Pump Union
(10) Pneumatic Tool Union
(11) Main Body Power
(12) Air Regulator Device

INSTALLATION

1 Place this product on solid ground and keep it flat. Securing the unit on the floor is recommended.

2 Attach work tray.

3 Install the spreading hook on the machine using orientation pin like the picture illustrates.

4 Attach a 1/4 NPT quick coupler nipple (not provided) into the fitting located on the treadle valve assembly. Use 1/4 inch air nose with 100 p.s.i. minimum.

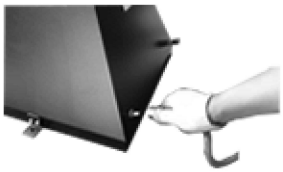

OPERATION

1 Before starting the machine, check carefully whether the fasterners on the machine are secured.

2 Fix the tire on the tire spreader with claw by hand.

3 Adjust the spreading claw to the appropriate height. Place the spreading hook to the link pin of the hanging device. Adjust the spreading hook, move the link pin and spreading hook up and down in order to insert into one of the adjusting holes.

4 Pedal the clamp foot valve, spread the tire to be the required width.

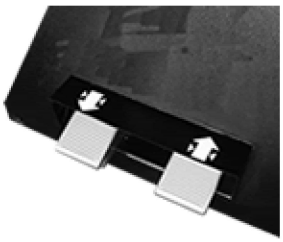

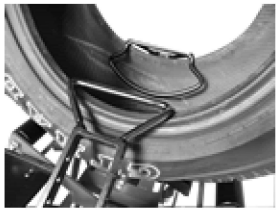

During the process of spreading if the tire seperates from the machine then the spreading hook is too high. Reduce its hight to the normal postion.

5 Tires need to be rotated to a new location, use the release foot valve to release air pressure till the spreading hook loosens, then put the tire on the machine rotary to find out a suitable location. Then repeat.

6 The work light equipped with the machine also needs to be adjusted to the most suitable location for full illumination.

7 When finished repairing tires, step down the release foot valve to release air pressure, spread hook to release then demount the tire from machine.

MAINTENANCE

- Add the lubrication oil to the oil cup at any time, always guarantee that the oil quantity in the cup is 1/3-2/3 of the total volume. For every 5-6 uses adjust drip oil in piston. Ensure that the oil pathway is clear.

- Clear away the dust and sundries always, check whether the fasterners are loose or not.

- Drip oil to the piston rod and the various parts of pin regularly. Reducing friction, extending machine life.

Body Assembly

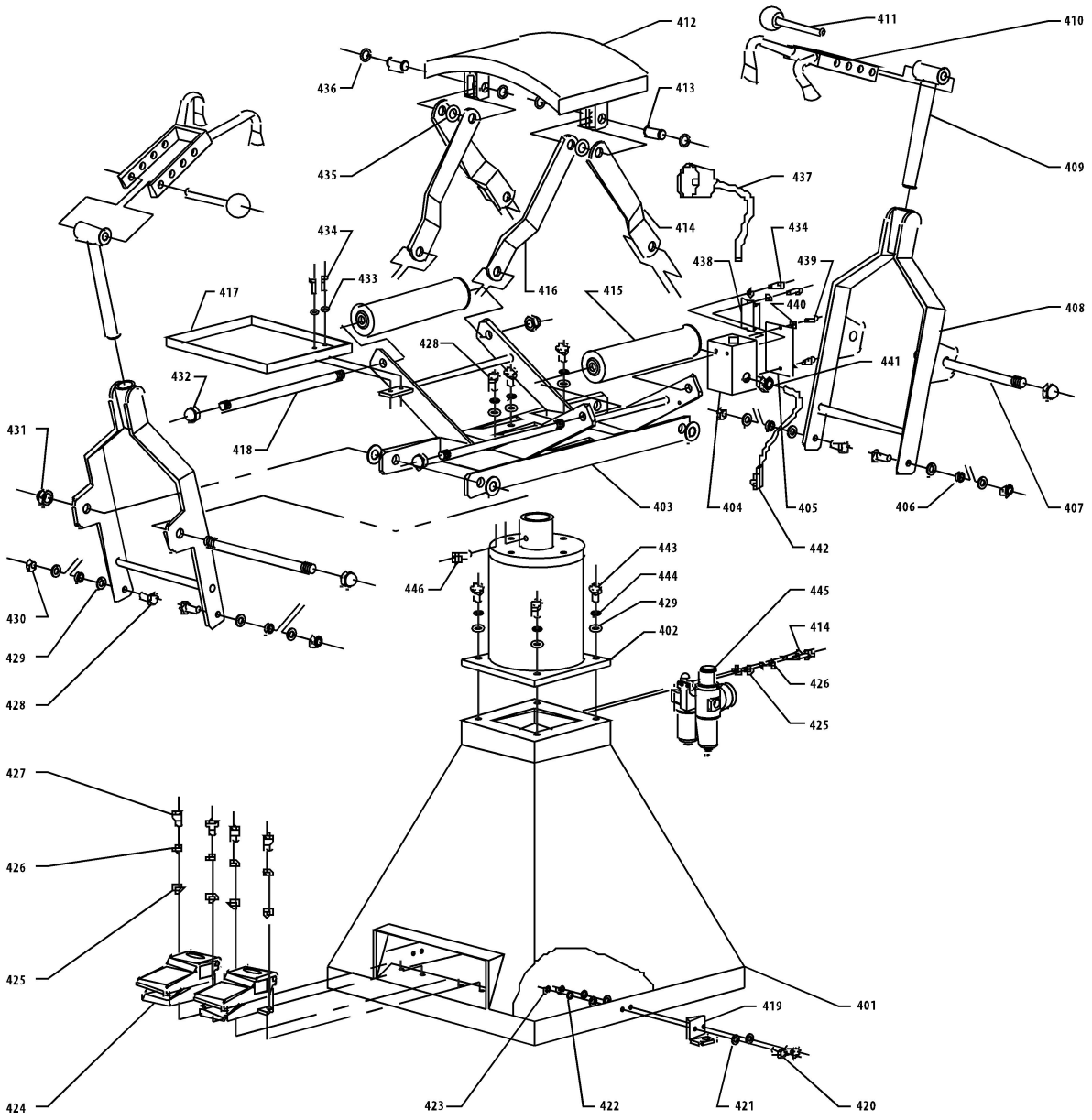

Pneumatics Assembly

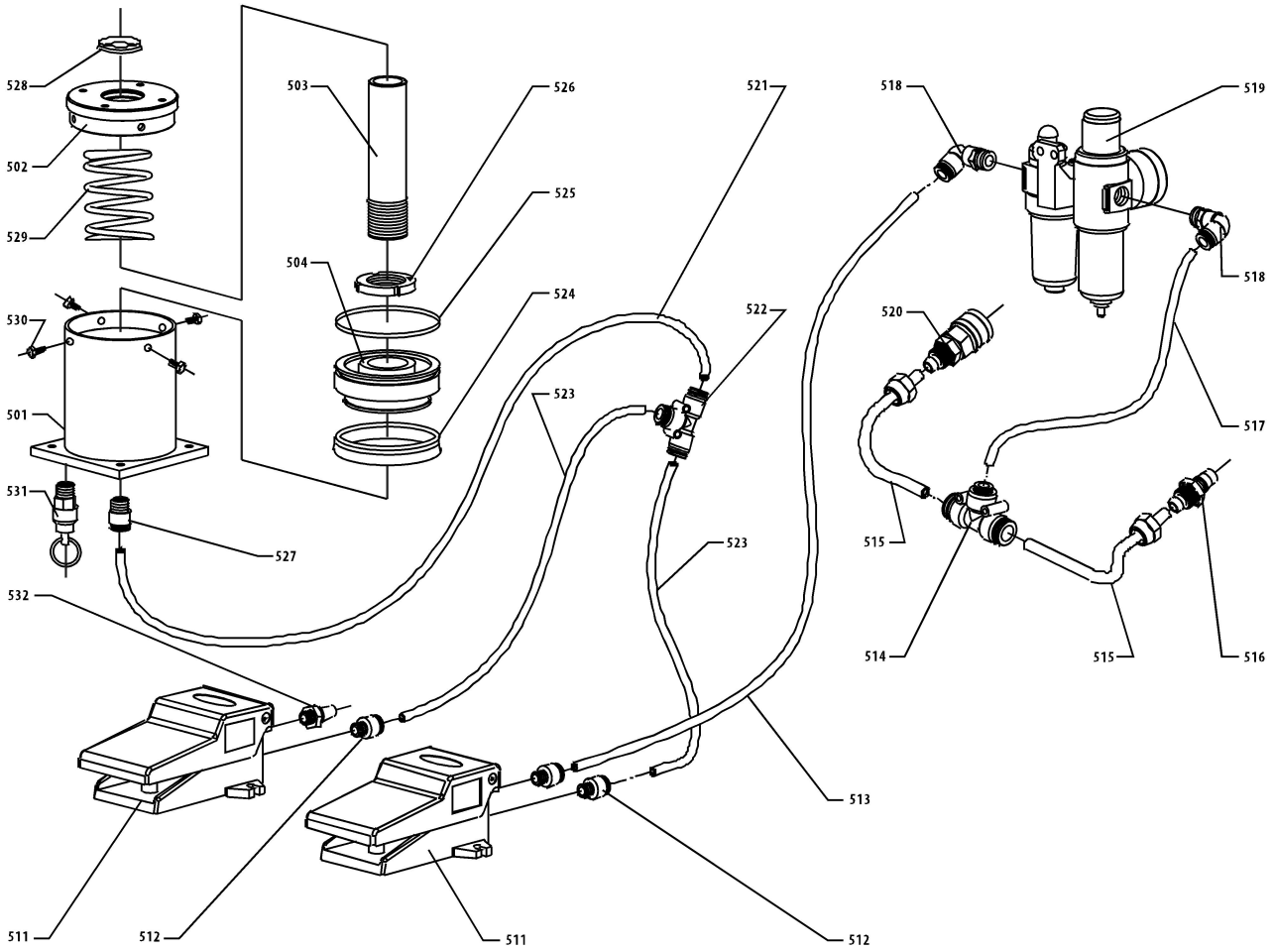

AME	NO	DESCRIPTION	QUANTITY
73100	401	Main Body	1
73100	402	Cylinder	1
73100	403	Bracket	1
73100	404	Power box	1
73100	405	Box cover	1
73100	406	sheath	4
73100	407	Staff 1	2
73100	408	Waver rack	2
73100	409	Shaft	2
73100	410	Spread hook	2
73100	411	Align pin	2
73100	412	Coping	1
73100	413	Coping shaft	2
73100	414	Connect board 2	2
73100	415	Bracket unite element	2
73100	416	Connect board 1	2
73100	417	Tool salver	1
73100	418	Staff 2	2
73100	419	Corner angle iron	2
73100	420	Hexangular bolt M6X16	4
73100	421	Even gasket 6	8
73100	422	Spring gasket 6	4
73100	423	Hexangular nut M6	4
73100	424	Step valve	2
73100	425	Big even gasket 5	2
73100	426	Spring gasket 5	6
73100	427	Column hexangular bolt M5X16	8
73100	428	Hexangular bolt M10X25	8
73100	429	Even gasket 10	8
73100	430	Cease nut M10	16
73100	431	Cover nut M16	4
73100	432	Hexangular nut M5	4
73100	433	Even gasket 5	2
73100	434	Cover nut M14	4
73100	435	Even gasket 16	6
73100	436	Shaft pring block ring16	4
73100	437	Working light	1
73100	438	Column hexangular bolt M5X10	2
73100	439	Crossed setboltM4X8	2
73100	440	Transformer	1
73100	441	Even gasket 4	2
73100	442	Across line	1
73100	443	Power line	1
73100	444	Hexangular bolt M10X30	4
73100	445	Column hexangular bolt M8X16	1
73100	446	Spring gasket 10	8
73100	447	Oil-water separator	1

AME	NO	DESCRIPTION	QUANTITY
73100	501	Cylinder	1
73100	502	Cylinder cover	1
73100	503	Piston staff	1
73100	504	Piston	1
73100	511	Step valve	2
73100	512	Direct tie-in	3
73100	513	PU pipe	2
73100	514	red-tee	1
73100	515	PU pipe	2
73100	516	Metal speediness tie-in	1
73100	517	PU pipe	1
73100	518	Right angle tie-in	2
73100	519	Oil-water separator	1
73100	520	Metal speediness tie-in	1
73100	521	PU pipe	1
73100	522	Straight tee	1
73100	523	PUpipe	1
73100	526	PU pipe	1
73100	527	PU pipe	1
73100	528	Y- windtight ring	1
73100	529	O- windtight ring	1
73100	530	Circinal nut M56X2	1
73100	531	Dustproof ring	1
73100	532	constringent spring	1
73100	533	Hexangular bolt M10X16	4
73100	534	Safety valve	1
73100	535	Silencer	1